AWM.
AMAROO

DENVER

AWM.NET.AU

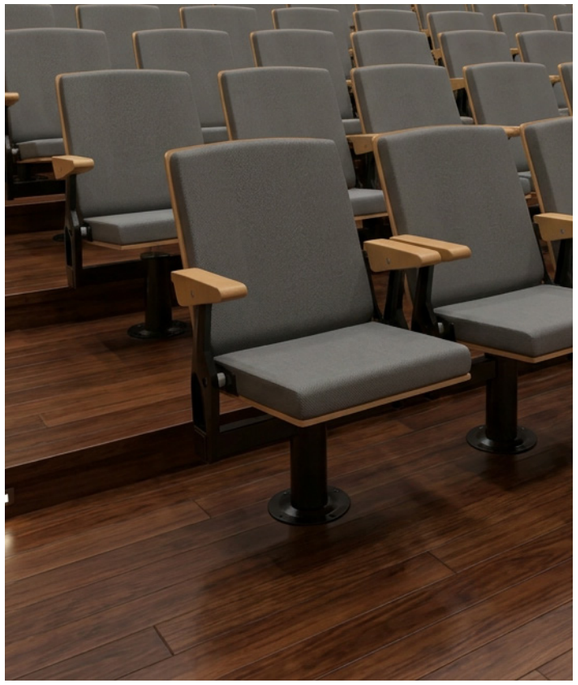

DENVER

The Denver auditorium seating is a refined, space-efficient flip-up seat designed for courtrooms, public galleries and other fixed-seating environments.

Its compact footprint helps maintain clear aisles and maximise available floor space, while the upholstered seat and back provide comfort throughout longer sessions. Timber outer panels and armrests bring warmth to the design, complemented by a robust black steel frame and floor-mounted pedestal for a clean, architectural finish.

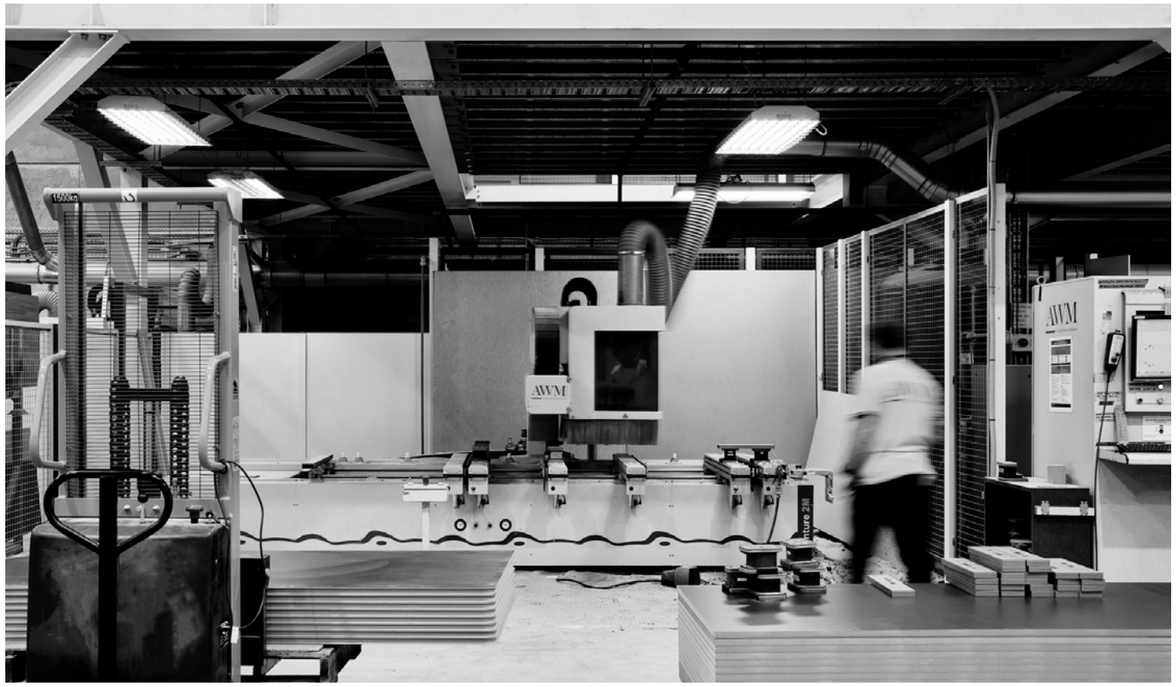

PROUDLY AUSTRALIAN

At AWM Amaroo, our pride and passion drive our dedication to Australian manufacturing. From our design process to final production, we ensure that every product is crafted with 100% Aussie-born quality.

As a locally-based company, we are committed to delivering bespoke products that reflect the excellence of Australian craftsmanship.

SPECIFICATIONS

Warranty	10 Years
Weight Capacity	135kg
Lead Time	8 - 10 Weeks
Details	Available in standard grey upholstery Upholstered seat and back for added comfort Timber back shell, seat edging and armrests Space-saving flip-up seat for improved aisle clearance when unoccupied Compact 530 mm seat width and 690 mm overall depth Standard black powdercoated robust steel frame with secure floor-mounted pedestal

STANDARD CONFIGURATIONS

Denver

Dimensions

SW	465mm
SD	430mm
SH	450mm

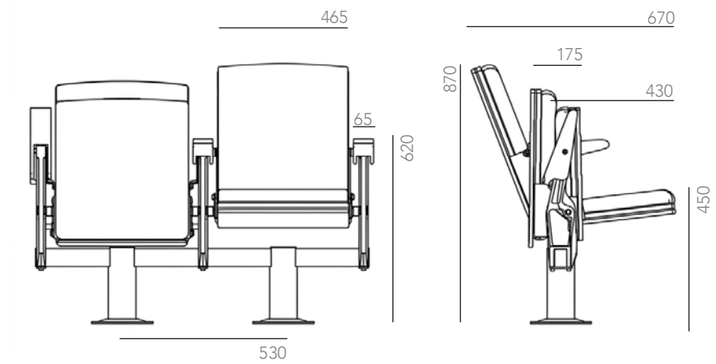

AWM. AMAROO

AWM is committed to adopting processes and practices aimed at reducing our environmental footprint whilst maintaining a superior level of quality. As a result of our diligence and leadership within this area, AWM is certified for a number of quality and environmental accreditations that acknowledge our commitment to producing superior quality products with as minimal environmental impact as possible.

ISO 9001
Quality Management

ISO 14001
Environmental Management

ISO 45001
Health & Safety Management

E. sales@awm.net.au
P. 1300 475 217

Sydney Showroom
118 Commonwealth St
Surry Hills, NSW 2010

Fairfield Factory
9 Malta St
Fairfield East, NSW 2165

Melbourne Showroom
132-134 Adderley St
West Melbourne, VIC 3003

AWM.
AMAROO

Colour and swatches shown in this document are for reference only and may differ in actuality. Copyright AWM Amaroo. All concepts, photography and ideas contained within this document are private and confidential. They must not be reproduced in any way or form and remain the intellectual property of awm. All products are registered designs with ip australia.